313311

24225

4 Hours / 70 Marks Seat No. | | | | | | | | |

Instructions – (1) All Questions are *Compulsory.*

(2) Answer each next main Question on a new page.

(3) Illustrate your answers with neat sketches wherever necessary.

(4) Figures to the right indicate full marks.

(5) Assume suitable data, if necessary.

(6) Use of Non-programmable Electronic Pocket Calculator is permissible.

(7) Mobile Phone, Pager and any other Electronic Communication devices are not permissible in Examination Hall.

Marks

1. Attempt any FIVE of the following: **10**

a) Draw the conventional representation of the following:

i) Long Break in pipe

ii) I-section pipe.

b) Draw the conventional representations of following:

i) Bearings

ii) Holes on circular pitch.

c) Draw the conventional representations of following machine components:

i) Bevel Gear

ii) Spur Gear

d) Define "Taper". Draw its standard convention.

Marks

e) Draw the actual view and conventional representation of:

i) Internal Screw thread

ii) Semi-elliptic leaf spring.

f) Draw a sketch showing basic size, lower deviation, upper deviation and tolerance.

g) State the meaning of the symbol shown in Figure No. 1.

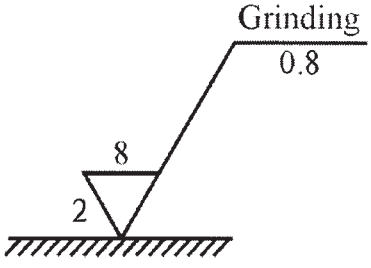

Fig. No. 1

2. Attempt any ONE of the following: **8**

a) Figure No. 2 shows front view, incomplete top view and partial auxiliary view of an object. Redraw the given views and complete the top view (use first angle method of projection.)

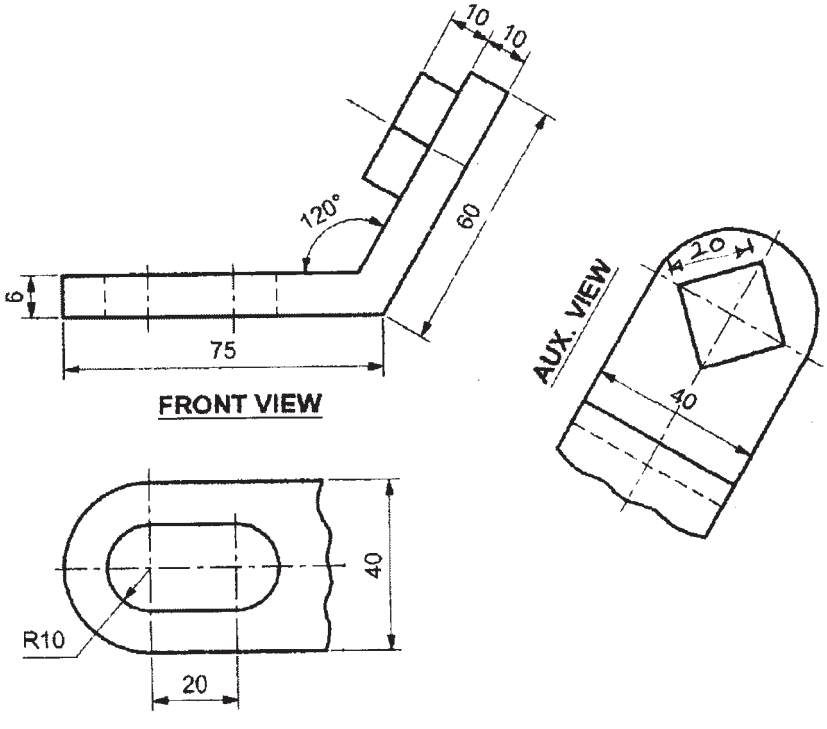

Fig. No. 2

Marks

b) Figure No. 3 shows front view and left hand side view of an object. Draw the given views and project an auxiliary top view looking in the direction of X.

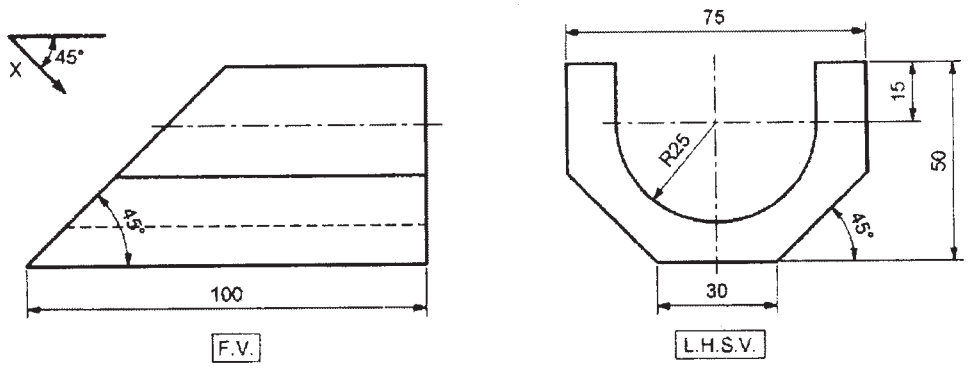

Fig. No. 3

3. Attempt any FIVE of the following: **20**

a) Draw conventional representation of any four of the following:

i) Glass

ii) Pipe or tubing

iii) Cast iron

iv) Splined shaft

v) Globe valve

vi) Counter sunk

b) Draw a sketch to represent taper 1:20 on a shaft of ϕ40mm and length 120mm.

c) Draw the symbols for the any two of following:

i) Single V butt weld

ii) Seam weld

iii) Spot weld

iv) Fillet weld with convex finish.

Marks

d) Draw the symbols of following features which are controlled in geometrical tolerance.

i) Symmetry

ii) Angularity

iii) Concentricity

iv) Flatness.

e) Two mild steel plants of 8 mm thickness are to be welded to have a lap joint by a fillet weld of leg length 8 mm. Represent the weld on drawing with proper symbol.

f) What is the meaning of symbol at *x* and *y* as shown in Figure No. 4.

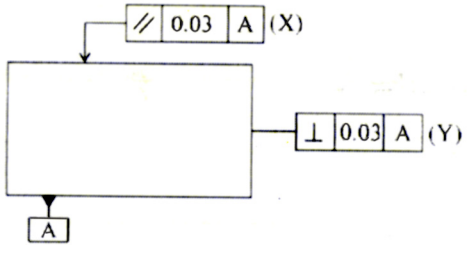

Fig. No. 4

g) The shaft is given as $\phi 20 \begin{smallmatrix} +0.023 \\ +0.012 \end{smallmatrix}$ and hole size is $\phi 20. \begin{smallmatrix} +0.018 \\ +0.000 \end{smallmatrix}$ Determine the types of fit between them.

4. Attempt the following: **16**

Figure No. 5 shows sectional F.V. and S.V. of the assembly of *'OLDHAM'S COUPLING'*. Draw the following details by using first angle method:

i) Flange: Front view and S.V.

ii) Central disc: Front view and S.V.

iii) Shaft: Front view and S.V.

iv) Key: F.V., T.V and S.V.

Marks

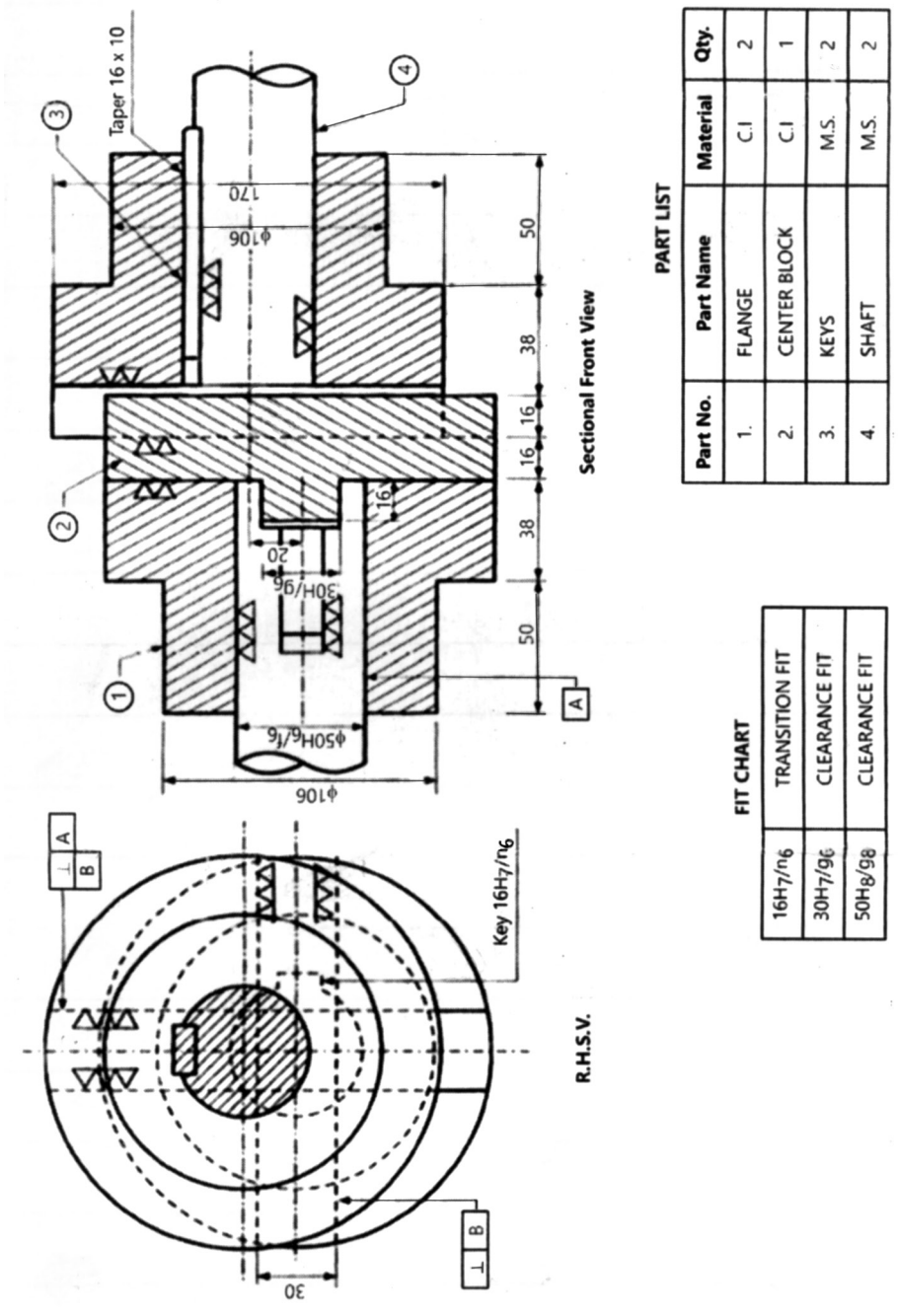

Part No.	Part Name	Material	Qty.
1.	FLANGE	C.I	2
2.	CENTER BLOCK	C.I	1
3.	KEYS	M.S.	2
4.	SHAFT	M.S.	2

16H7/n6	TRANSITION FIT
30H7/g6	CLEARANCE FIT
50H8/g8	CLEARANCE FIT

Fig. No. 5: Oldham's coupling

Marks

5. Attempt any ONE of the following: 16

a) Figure No. 6 shows the details of '*FOOT STEP BEARING*'. Draw the following views of the assembly:

i) Section Front view

ii) Top view

Use suitable scale

Give overall dimension. Show assembly fits.

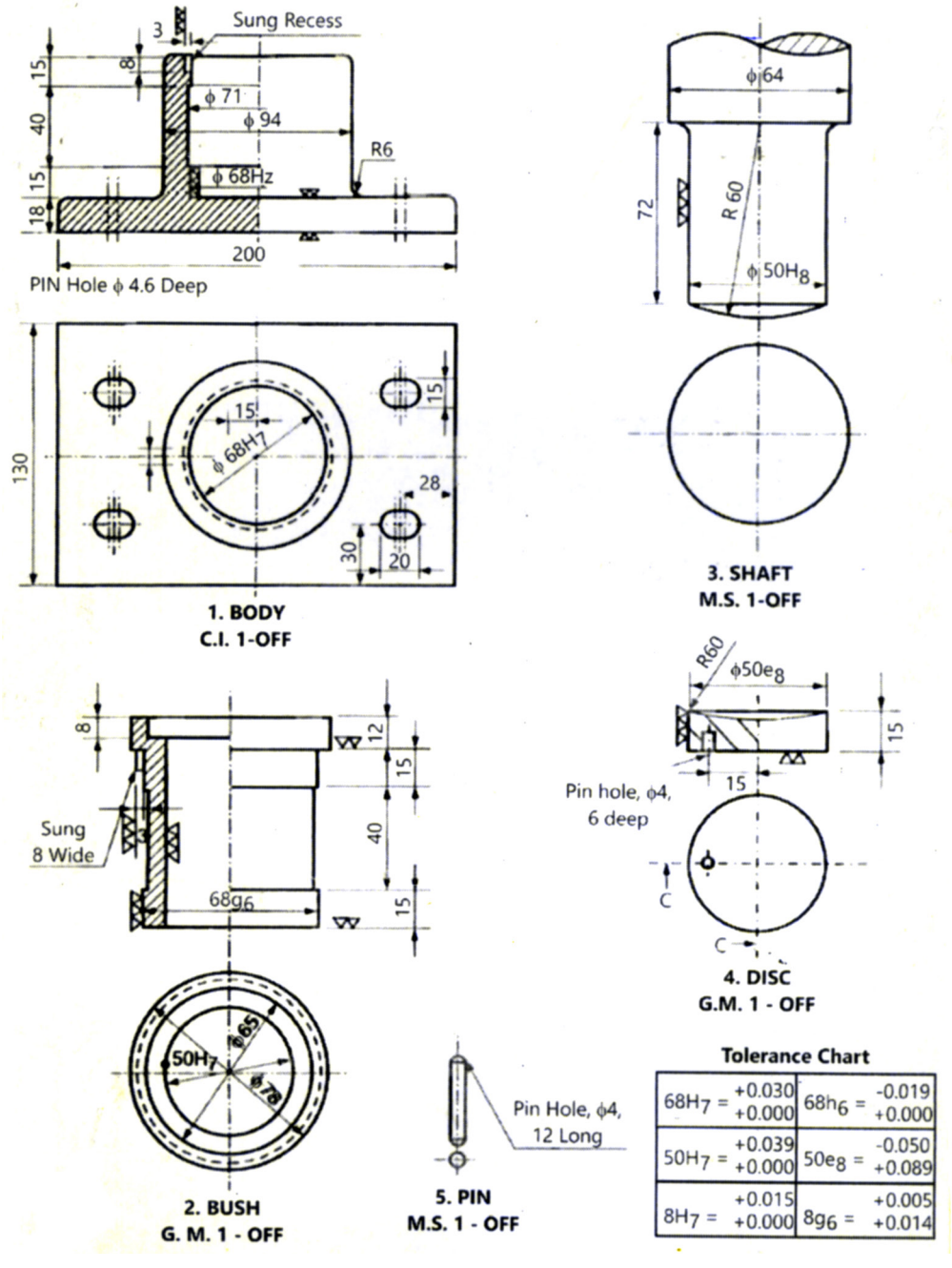

Fig. No. 6: Details of foot step bearing

Marks

b) Figure No. 7 shows the details of '*LATHE TOOL POST*'. Draw the following views of the assembly:

i) Sectional front view

ii) Top view

iii) Prepare bill of material. Indicate types of fit.

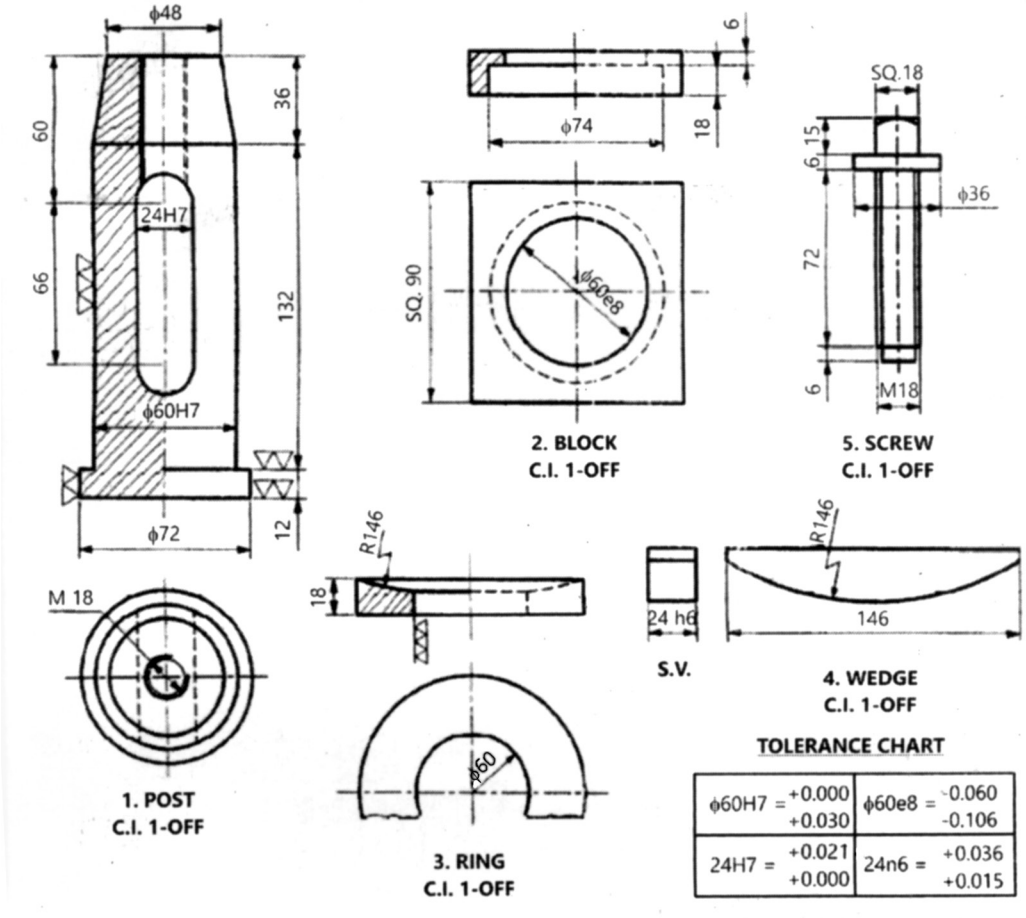

Fig. No. 7: Lathe tool post